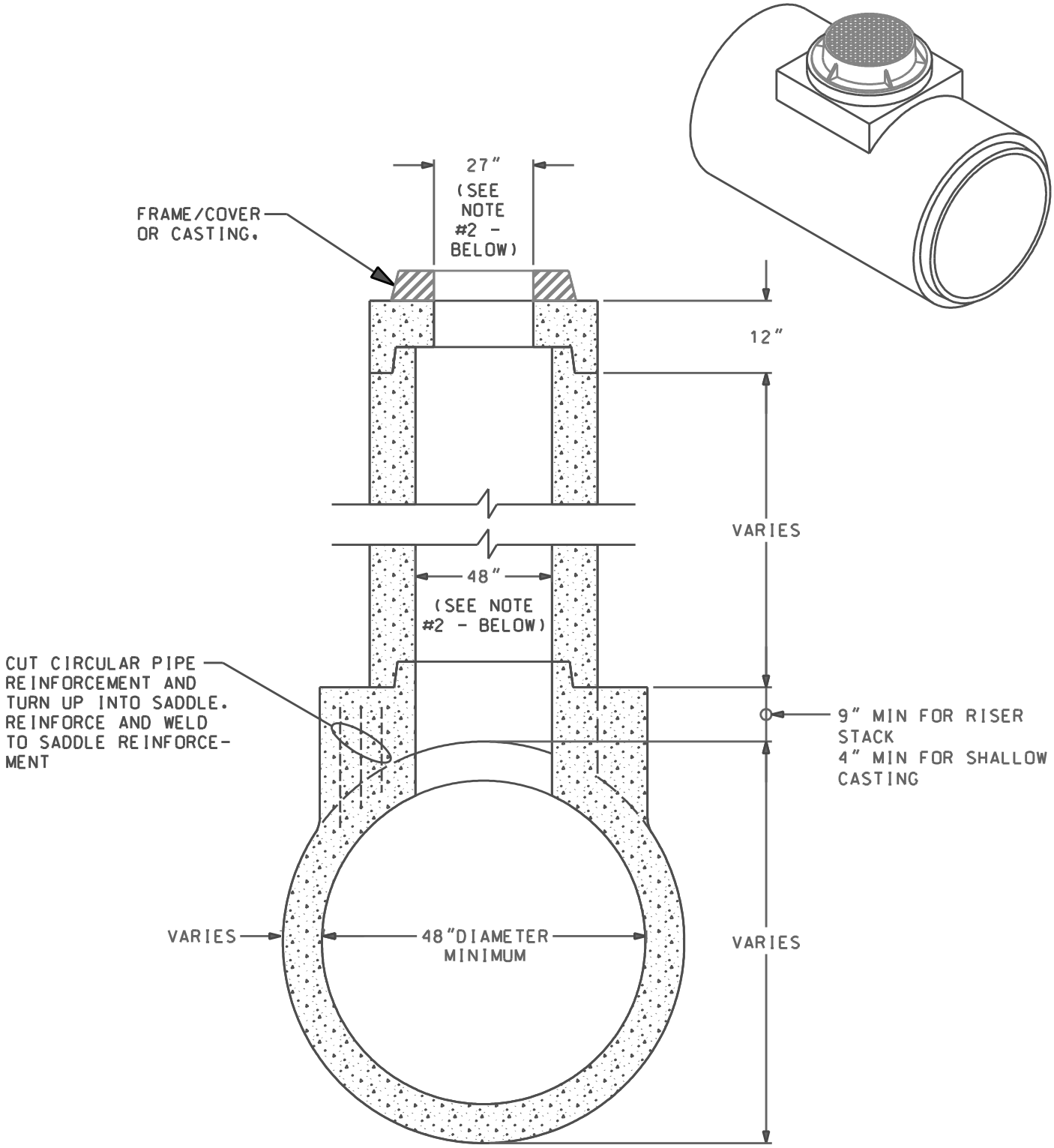

GENERAL NOTES:

1. STACK-OUT (RISERS) ARE AVAILABLE IN A VARIETY OF SIZES AND SHAPES TO ACCOMMODATE SANITARY MANHOLES OR STORM STRUCTURES (IN RECTANGULAR, SQUARE, OR ROUND). RISER SHAPES ARE DICTATED BY TRUNK DIAMETER AND HYDRAULIC OPENING OF CASTING.

2. CHECK WITH SDCI REPRESENTATIVES FOR OTHER OPTIONS.

PRODUCTS FOLEY COMPANY

HERMITAGE,TN LENOIR CITY,TN
FRANKLIN,TN CHATANOOGA,TN

TYPICAL SADDLE TEE INLET / MANHOLE	SCALE: NTS	PH• 1-800-737-0707	DWG# RCP-030
		DATE:09/08/08	SHEET# 1 OF 1