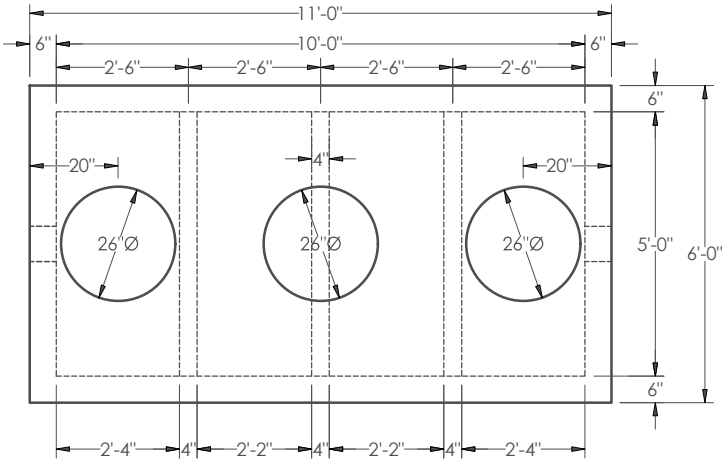

PLAN

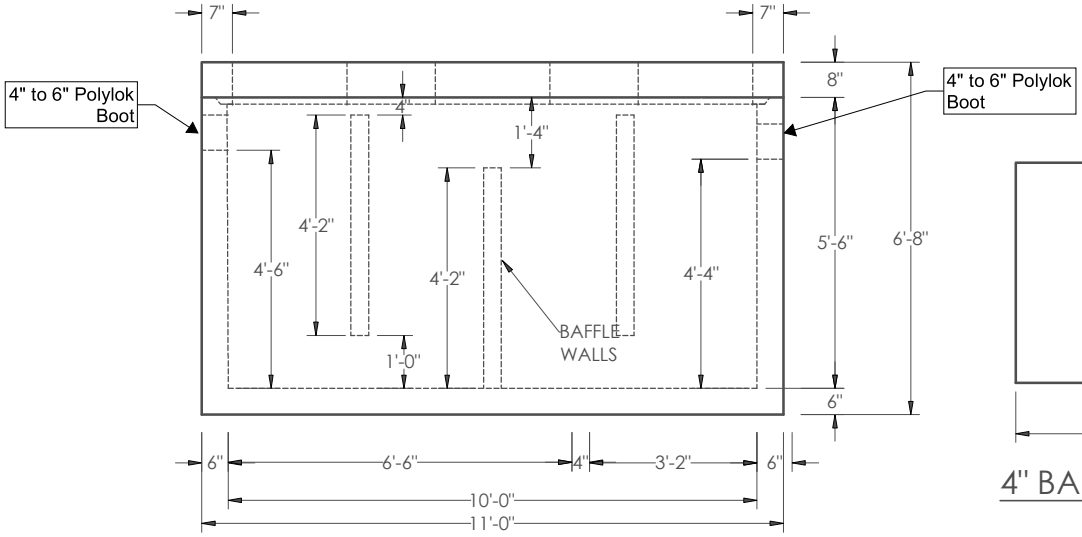

ELEVATION

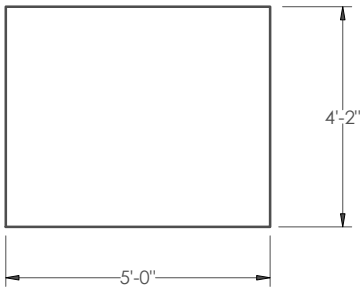

4" BAFFLE WALL (3)

NOTES:

1. CONCRETE STRENGTH = 5000 PSI @ 28 DAYS MINIMUM
2. MANUFACTURED PER ASTM C1613
3. STRUCTURE DESIGN FOR HS20 LOADING W/ 0 TO 2 FT. COVER AND ASSUMED WATER TABLE DEPTH 3 FT.
4. REINFORCEMENT:

SLAB & TOP: #5 BAR @ 6" O.C. SHORT DIRECTION
#5 BAR @ 12" O.C. LONG DIRECTION

WALLS: HORIZONTAL #5 BAR @ 8" O. C.
VERTICAL #5 BAR @ 6" O.C.

APPROXIMATED WEIGHT:
BASE WEIGHT = 9.02 TON
TOP WEIGHT = 3.00 TON
4" BAFFLE WALL = 0.52

PRODUCTS FOLEY COMPANY	DWG. NO. GT TANKS WITH 3 WALLS.DWG	TITLE FPC SUBMITTAL DRAWING FOR 1500 GAL G.T.	
	SCALE NTS	DATE 05-22-2017	DRAWN BY GET

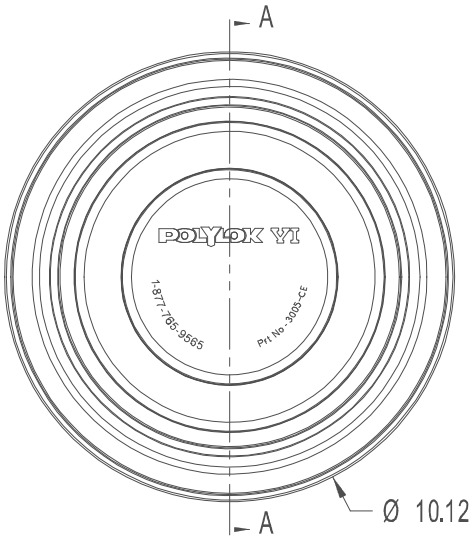

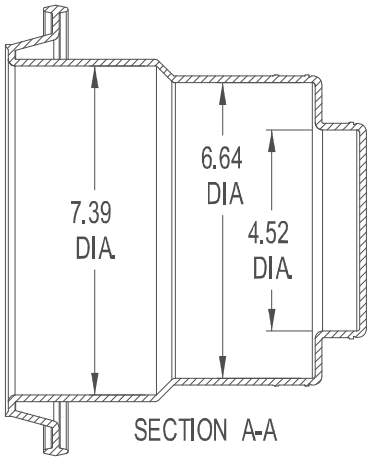

SECTION A-A

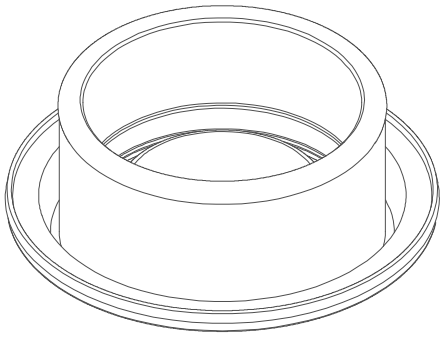

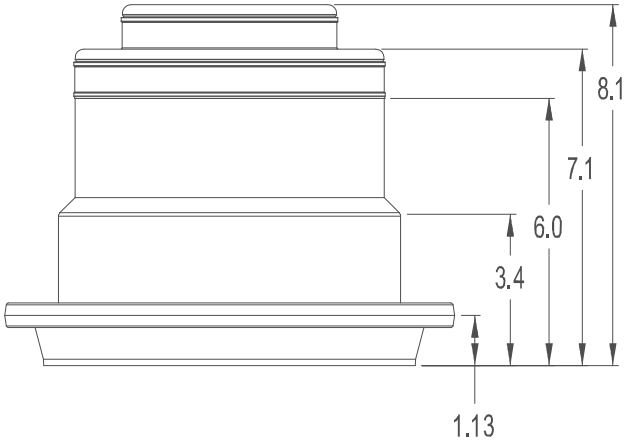

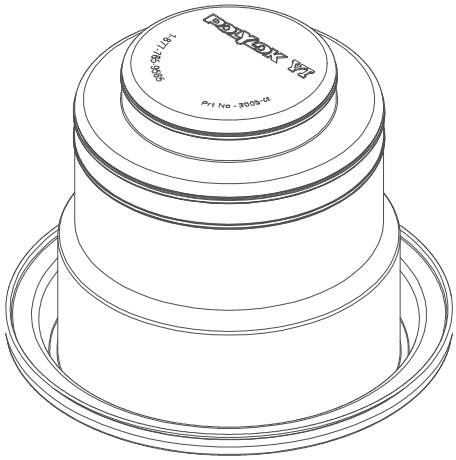

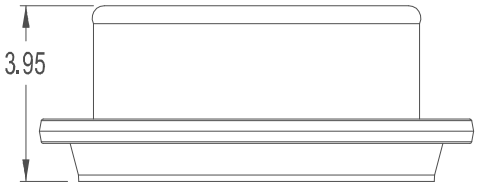

COLLAPSED BOOT

POLYLOK TYPE VI 4" - 6" BOOT SEAL
PART NO. 3005-CE
MATERIAL - RUBBER