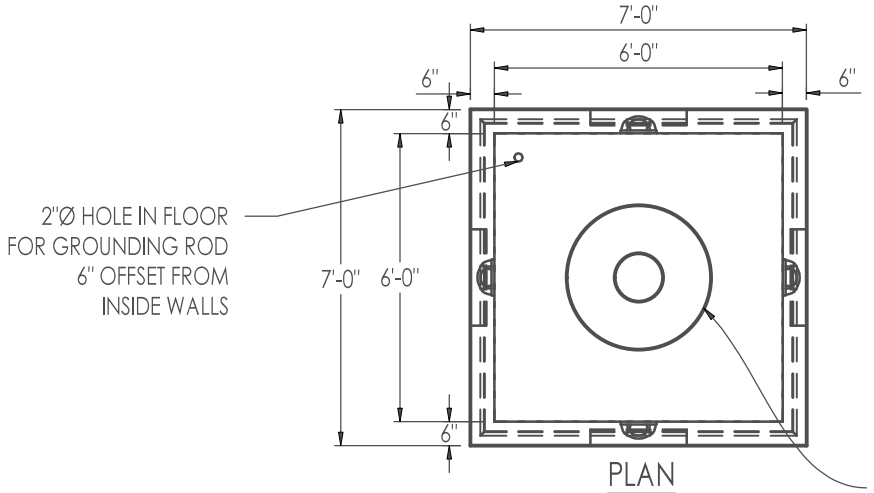


PLAN

ROUND CASTINGS
AVAILABLE IN VARIABLE SIZES
Ø24", Ø30", Ø36", and Ø48"

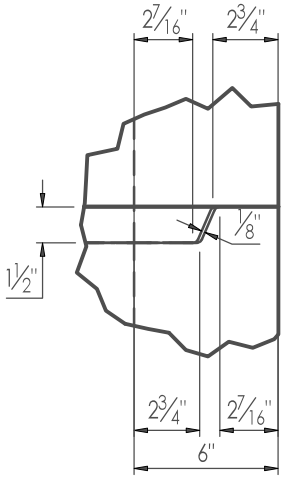


JOINT DETAIL

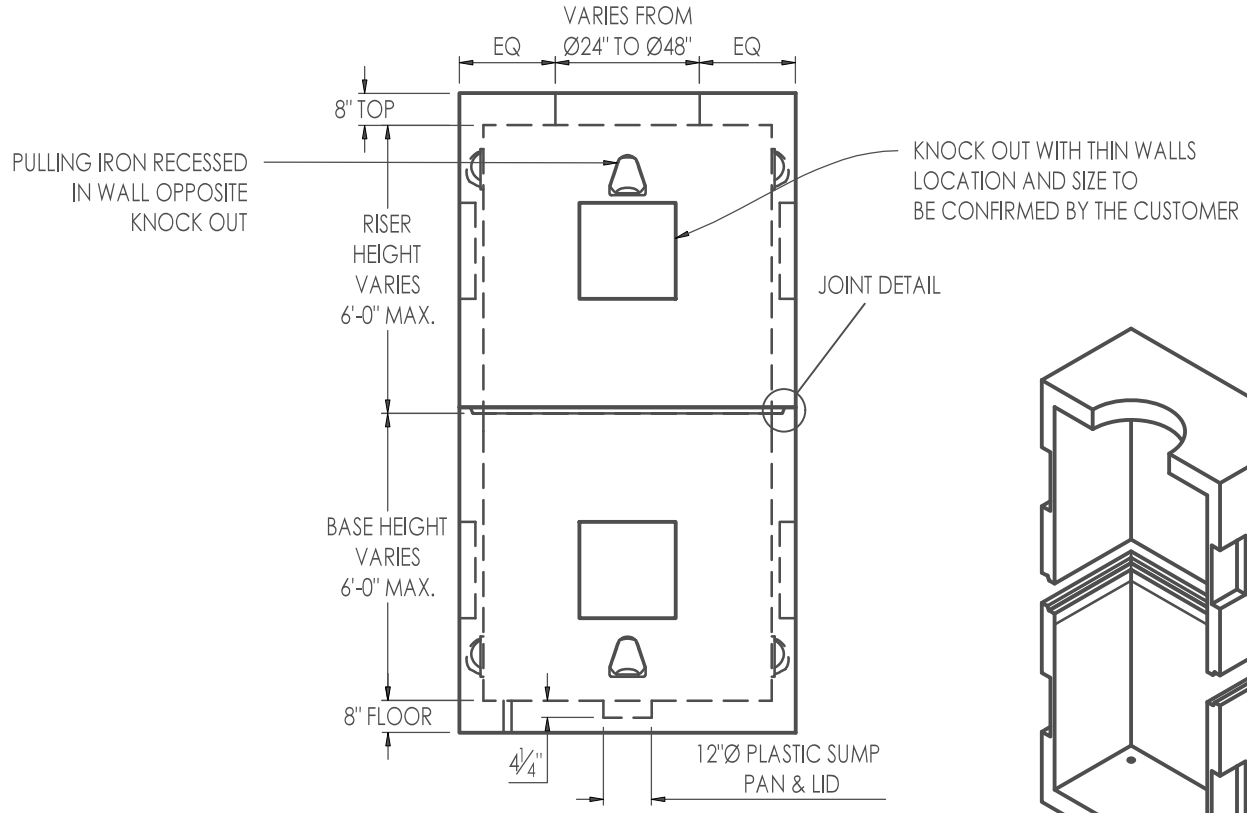


ELEVATION

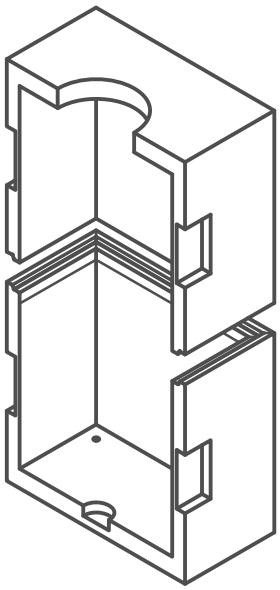

NOTES:

1. CONCRETE: 5,000 PSI, TYPE 1L CEMENT
2. DESIGNED FOR TRAFFIC HS-20
3. DESIGNED FOR 4 ft. EARTH FILL ABOVE BOX
4. ASSUMED WATER TABLE DEPTH: 4 ft.
5. SEPARATE TOP AVAILABLE IF BASE ONLY NEEDED
6. RACKING & ARMS INSTALLED BY CONTRACTOR

APPROXIMATE WEIGHTS:
(PARTS SHOWN: 6FT TALL)
HR TOP 6FT: 7.49 TONS
BASE 6FT: 7.95 TONS

PRODUCTS FOLEY COMPANY

# ELECTRICAL VAULT

6'x6' BOX

**2.35 R1**