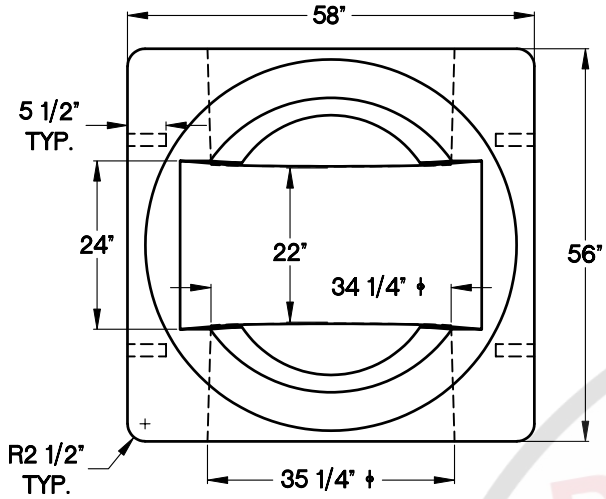

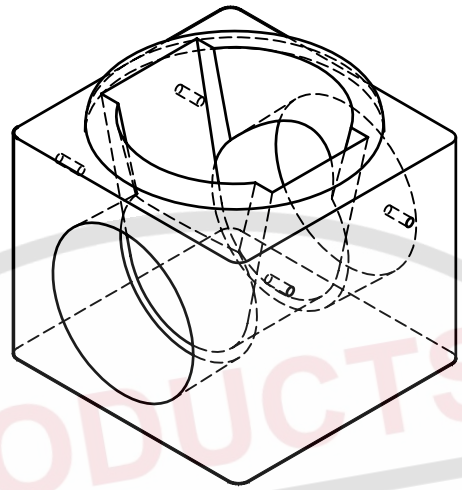

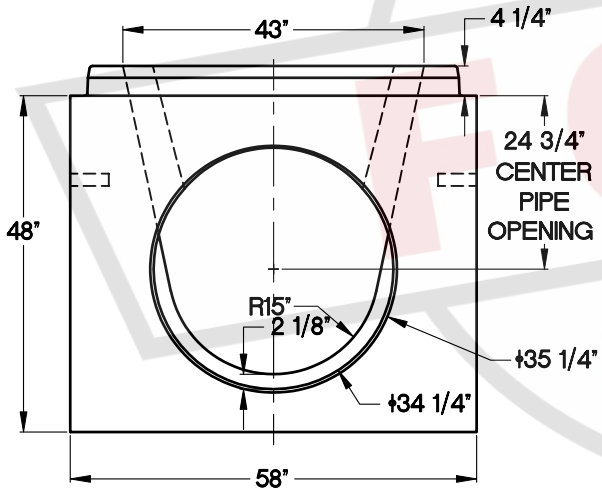

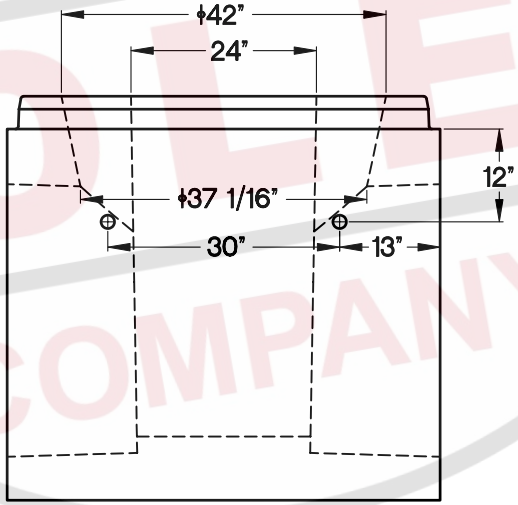

Structure manufactured to ASTM C 478 and/or C 913.

Reinforcing conforms to either ASTM A 185 for wire mesh or A 615 (Gr 60) for reinforcing bars.

4000 PSI concrete minimum.

Equipped with two 38 W boots for use with 30" ductile iron pipe.

Transition top to 48" diameter for flat top or stack out.

Approximate weight: 4 tons

PRODUCTS FOLEY COMPANY

PRODUCTS FOLEY COMPANY
208 JEFFERSON STREET
NEWNAN, GEORGIA 30263
(770) 251-0296

30"-0° Ductile Iron Transition Base

SECTION	D. I. TRANSITION	DATE 11-01-01	REVISION
SCALE	NTS	DRAWN BY DRM	PAGE # 11-1

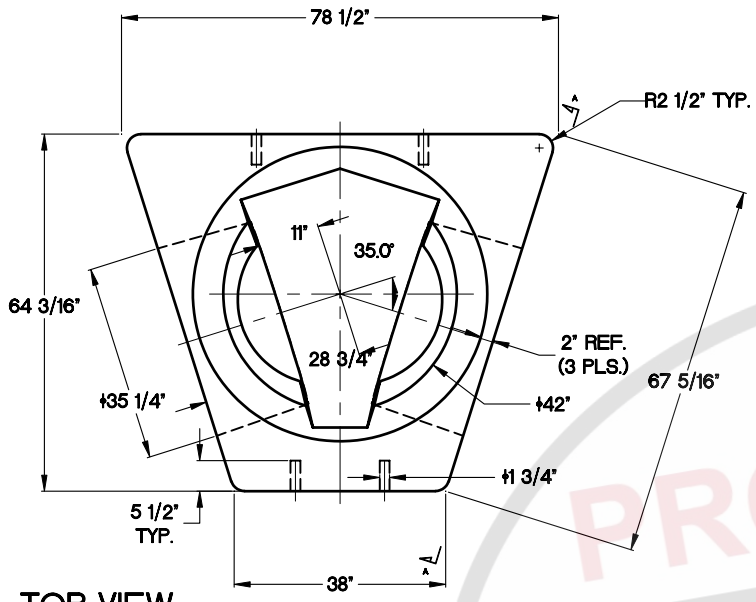

TOP VIEW

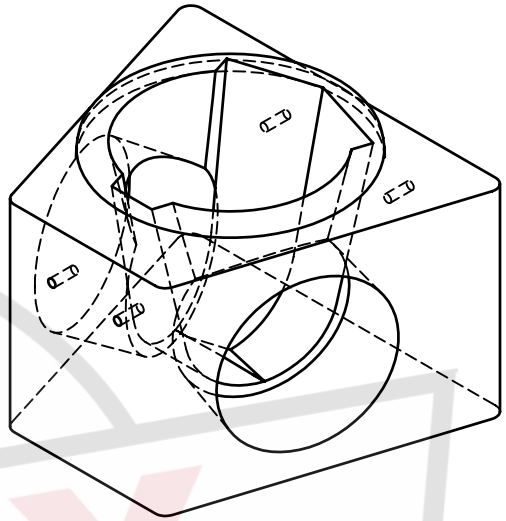

ISOMETRIC VIEW

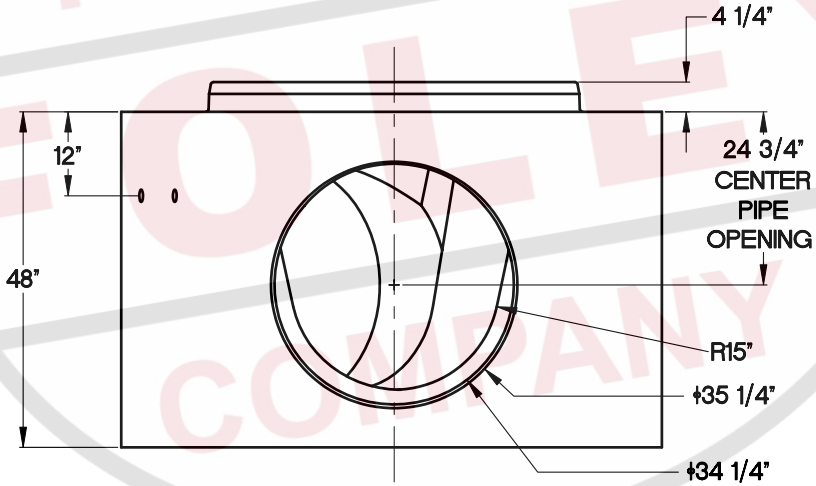

VIEW A-A

Structure manufactured to ASTM C 478 and/or C 913.

Reinforcing conforms to either ASTM A 185 for wire mesh or A 615 (Gr 60) for reinforcing bars.

4000 PSI concrete minimum.

Equipped with two 38 W boots for use with 36" ductile iron pipe.

Transition top to 48" diameter for flat top or stack out.

Approximate weight: 5 tons.

PRODUCTS FOLEY COMPANY

PRODUCTS FOLEY COMPANY
208 JEFFERSON STREET
NEWNAN, GEORGIA 30263
(770) 251-0296

30"-35° Ductile Iron Transition Base

SECTION	D. I. TRANSITION	DATE 11-01-01	REVISION
SCALE	NTS	DRAWN BY DRM	PAGE # 11-2

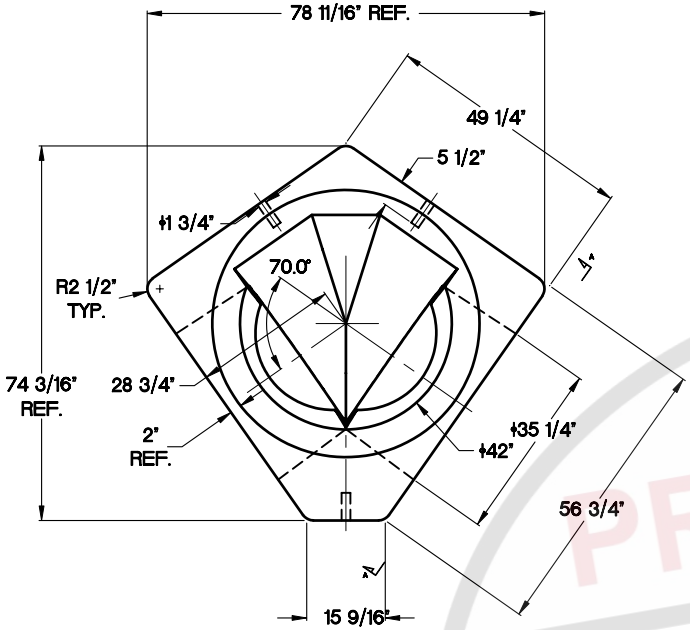

TOP VIEW

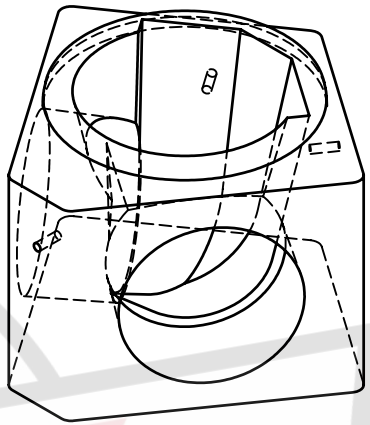

ISOMETRIC VIEW

Structure manufactured to ASTM C 478 and/or C 913.

Reinforcing conforms to either ASTM A 185 for wire mesh or A 615 (Gr 60) for reinforcing bars.

4000 PSI concrete minimum.

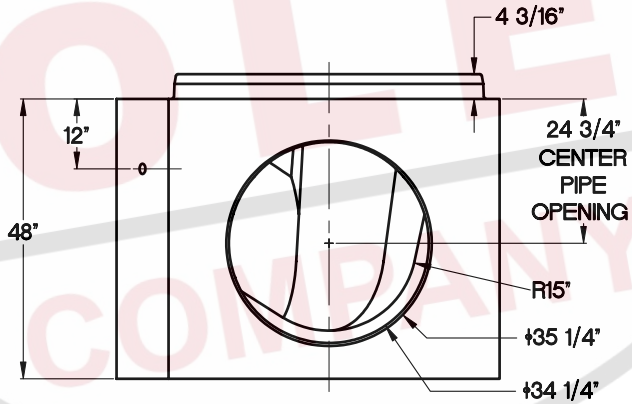

VIEW A-A

Equipped with two 38 W boots for use with 36" ductile iron pipe.

Transition top to 48" diameter for flat top or stack out.

Approximate weight: 4.3 tons.

PRODUCTS FOLEY COMPANY

208 JEFFERSON STREET
NEWNAN, GEORGIA 30263
(770) 251-0296

30"-70° Ductile Iron Transition Base

SECTION	D. I. TRANSITION	DATE 11-01-01	REVISION
SCALE	NTS	DRAWN BY DRM	PAGE # 11-3

PRODUCTS FOLEY COMPANY

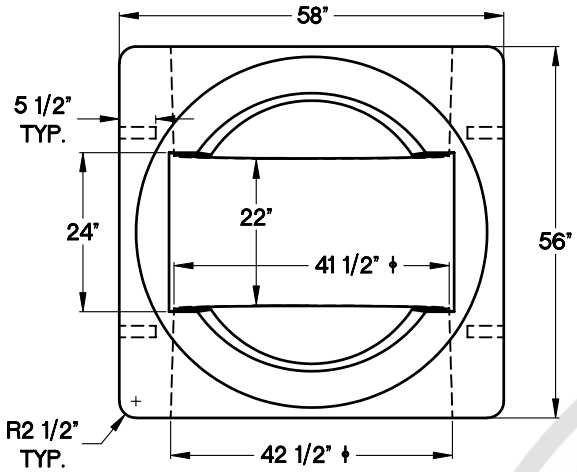

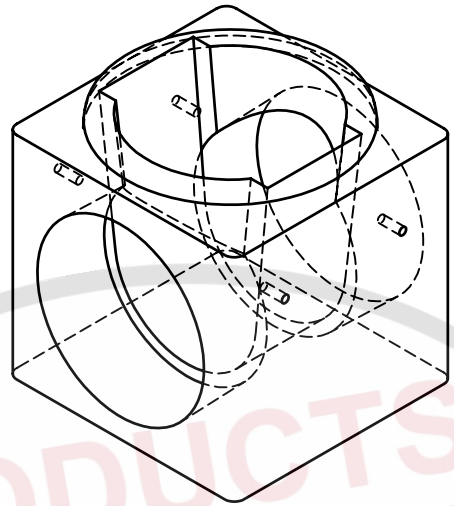

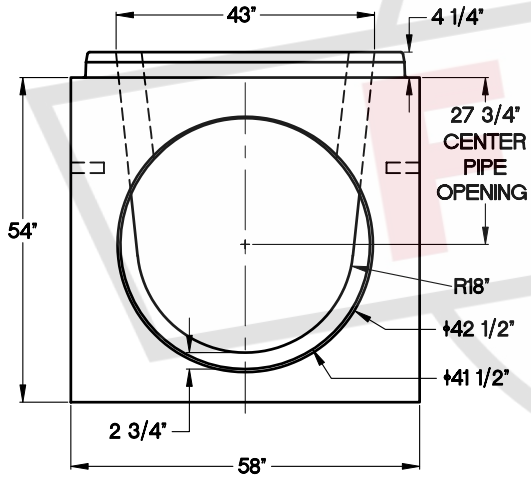

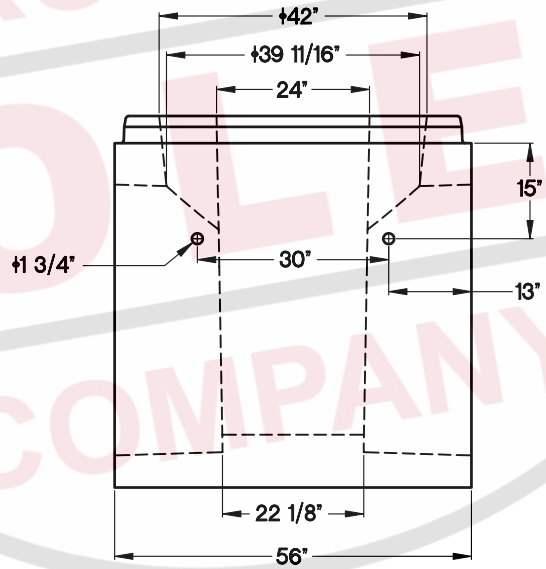

Structure manufactured to ASTM C 478 and/or C 913.

Reinforcing conforms to either ASTM A 185 for wire mesh or A 615 (Gr 60) for reinforcing bars.

4000 PSI concrete minimum.

Equipped with two S206-42 boots for use with 36" ductile iron pipe.

Transition top to 48" diameter for flat top or stack out.

Approximate weight: 4 tons

PRODUCTS FOLEY COMPANY

PRODUCTS FOLEY COMPANY
208 JEFFERSON STREET
NEWNAN, GEORGIA 30263
(770) 251-0296

36"-0° Ductile Iron Transition Base

SECTION	D. I. TRANSITION	DATE 11-01-01	REVISION
SCALE	NTS	DRAWN BY DRM	PAGE # 11-4

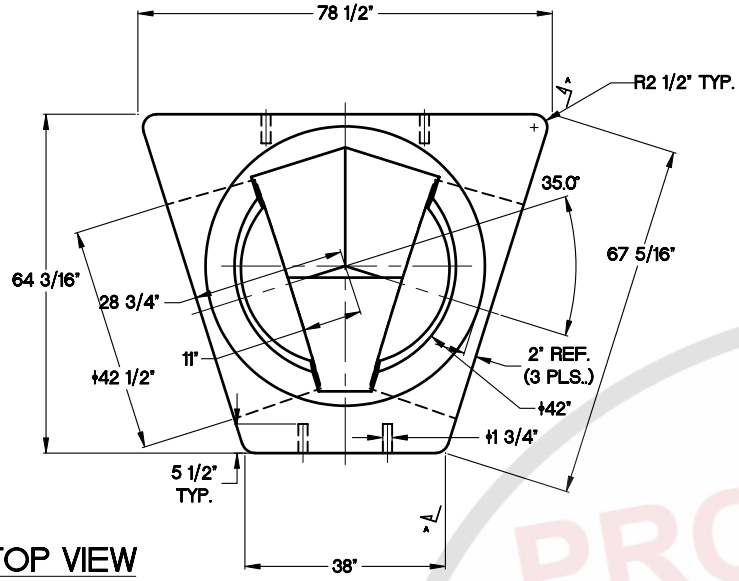

TOP VIEW

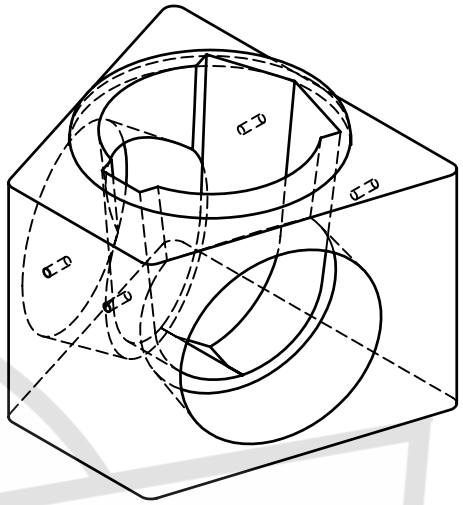

ISOMETRIC VIEW

Structure manufactured to ASTM C 478 and/or C 913.

Reinforcing conforms to either ASTM A 185 for wire mesh or A 615 (Gr 60) for reinforcing bars.

4000 PSI concrete minimum.

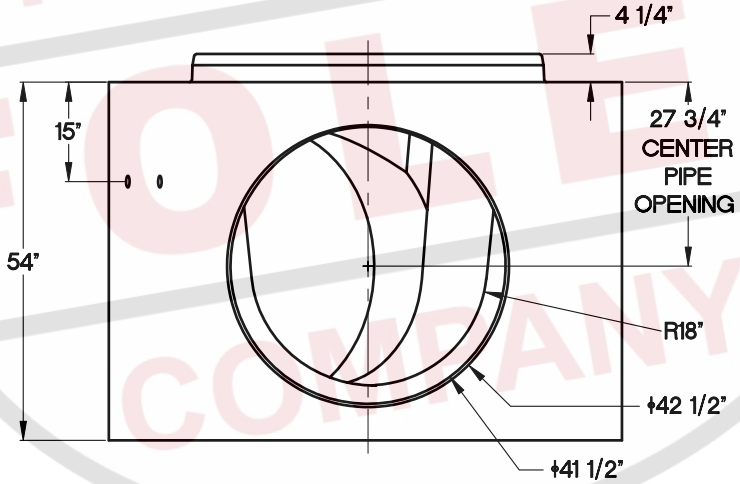

VIEW A-A

Equipped with two S206-42 boots for use with 36" ductile iron pipe.

Transition top to 48" diameter for flat top or stack out.

Approximate weight 5 tons.

PRODUCTS FOLEY COMPANY

PRODUCTS FOLEY COMPANY
208 JEFFERSON STREET
NEWNAN, GEORGIA 30263
(770) 251-0296

36"-35° Ductile Iron Transition Base

SECTION	D. I. TRANSITION	DATE 11-01-01	REVISION
SCALE	NTS	DRAWN BY DRM	PAGE # 11-5

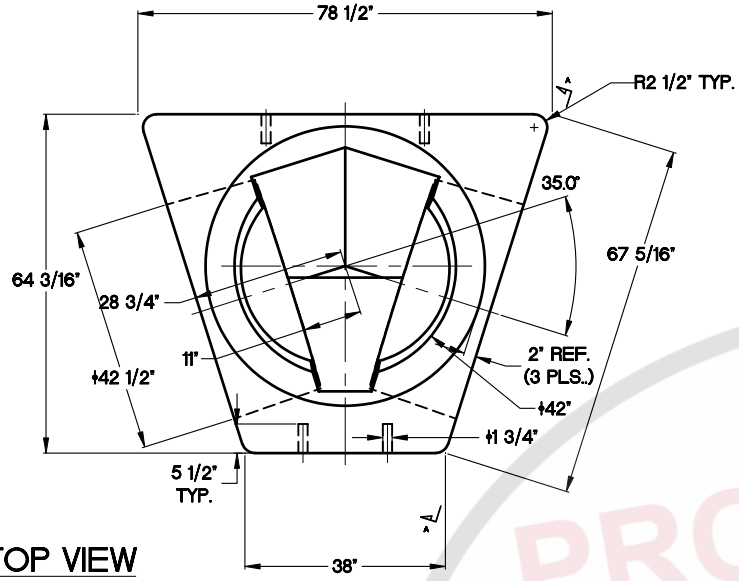

TOP VIEW

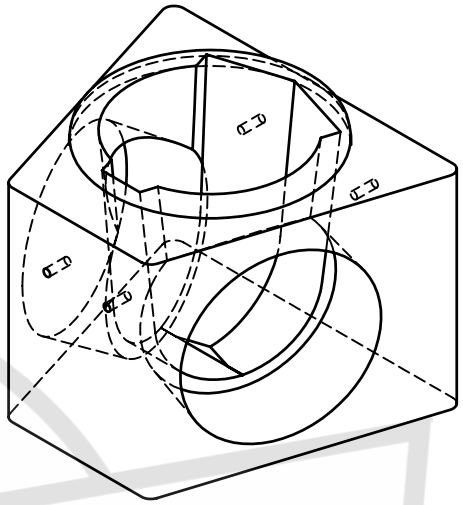

ISOMETRIC VIEW

Structure manufactured to ASTM C 478 and/or C 913.

Reinforcing conforms to either ASTM A 185 for wire mesh or A 615 (Gr 60) for reinforcing bars.

4000 PSI concrete minimum.

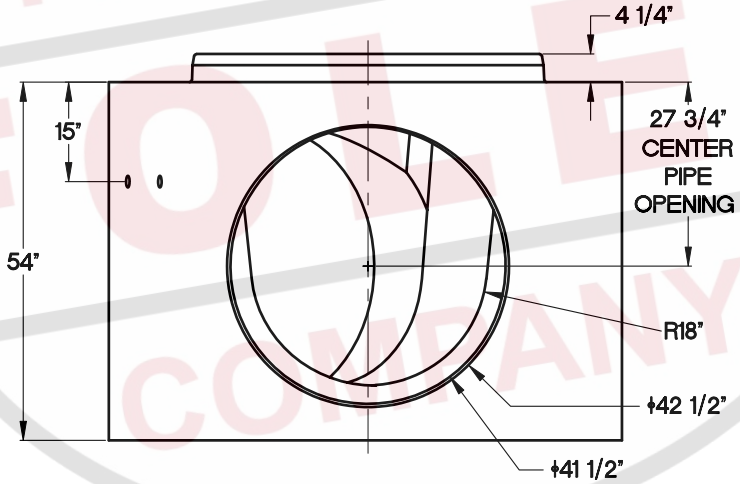

VIEW A-A

Equipped with two S206-42 boots for use with 36" ductile iron pipe.

Transition top to 48" diameter for flat top or stack out.

Approximate weight 5 tons.

PRODUCTS FOLEY COMPANY

PRODUCTS FOLEY COMPANY
208 JEFFERSON STREET
NEWNAN, GEORGIA 30263
(770) 251-0296

36"-35° Ductile Iron Transition Base

SECTION	D. I. TRANSITION	DATE 11-01-01	REVISION
SCALE	NTS	DRAWN BY DRM	PAGE # 11-5

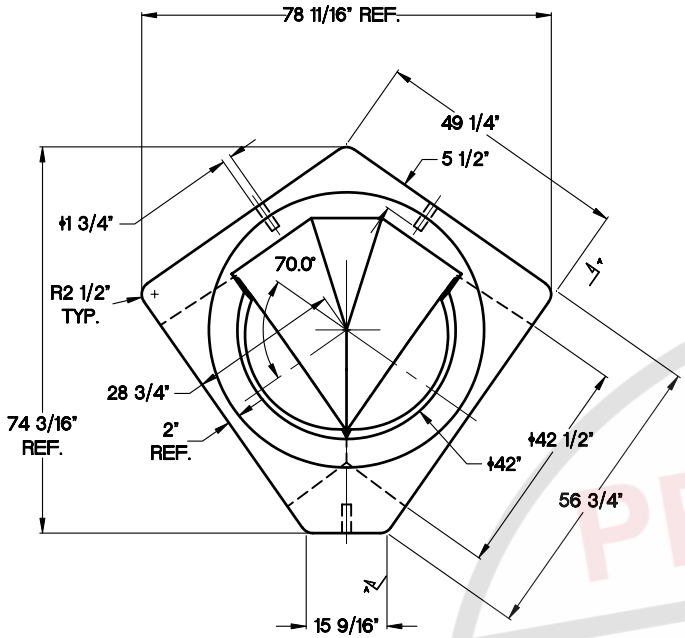

TOP VIEW

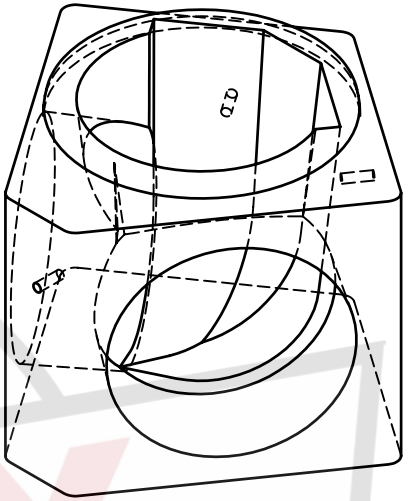

ISOMETRIC VIEW

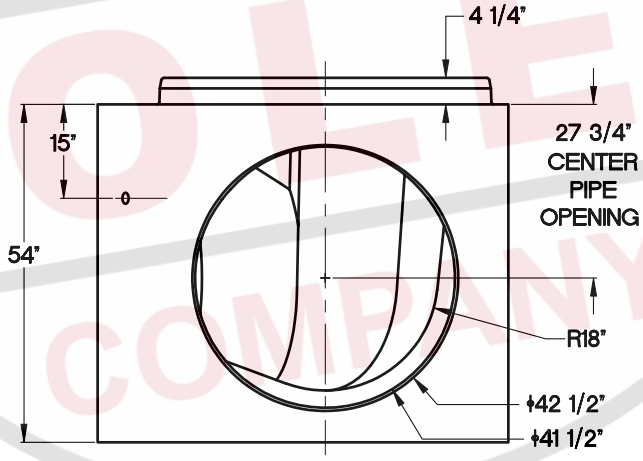

VIEW A-A

Structure manufactured to ASTM C 478 and/or C 913.

Reinforcing conforms to either ASTM A 185 for wire mesh or A 615 (Gr 60) for reinforcing bars.

4000 PSI concrete minimum.

Equipped with two S206-42 boots for use with 36" ductile iron pipe.

Transition top to 48" diameter for flat top or stack out.

Approximate weight: 4.3 tons.

PRODUCTS FOLEY COMPANY

PRODUCTS FOLEY COMPANY
208 JEFFERSON STREET
NEWNAN, GEORGIA 30263
(770) 251-0296

36"-70° Ductile Iron Transition Base

SECTION	D. I. TRANSITION	DATE 11-01-01	REVISION
SCALE	NTS	DRAWN BY DRM	PAGE # 11-6

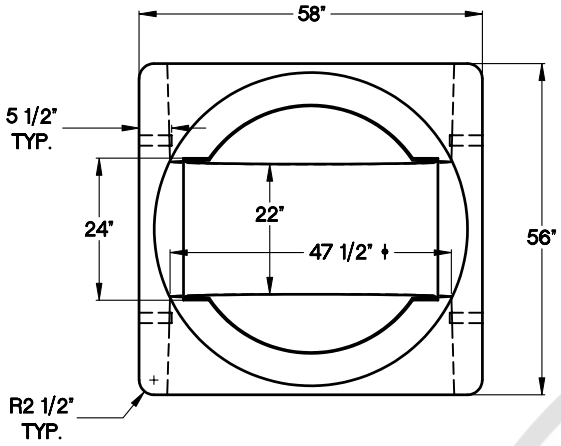

TOP VIEW

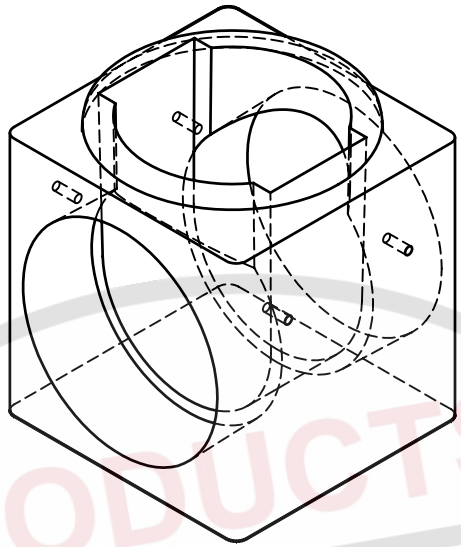

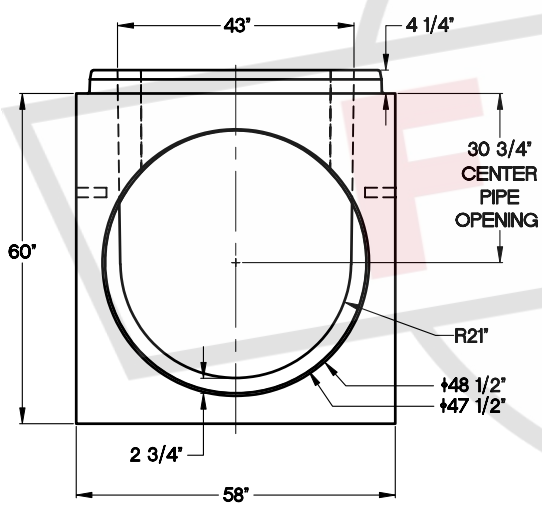

FRONT VIEW

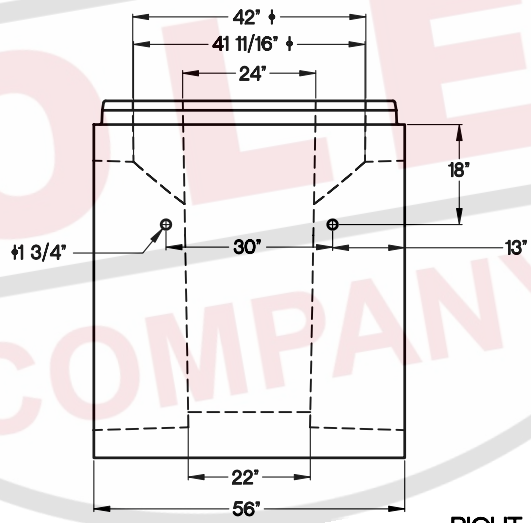

RIGHT VIEW

Structure manufactured to ASTM C 478 and/or C 913.

Reinforcing conforms to either ASTM A 185 for wire mesh or A 615 (Gr 60) for reinforcing bars.

4000 PSI concrete minimum.

Equipped with two S206-48 boots for use with 42" ductile iron pipe.

Transition top to 48" diameter for flat top or stack out.

Approximate weight: 3.8 tons.

PRODUCTS FOLEY COMPANY

PRODUCTS FOLEY COMPANY
208 JEFFERSON STREET
NEWNAN, GEORGIA 30263
(770) 251-0296

42"-0° Ductile Iron Transition Base

SECTION	D. I. TRANSITION	DATE 11-01-01	REVISION
SCALE	NTS	DRAWN BY DRM	PAGE # 11-7

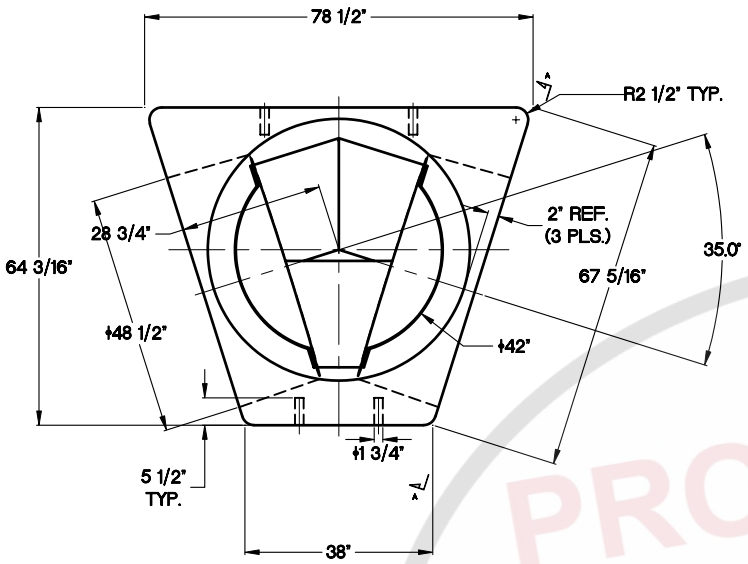

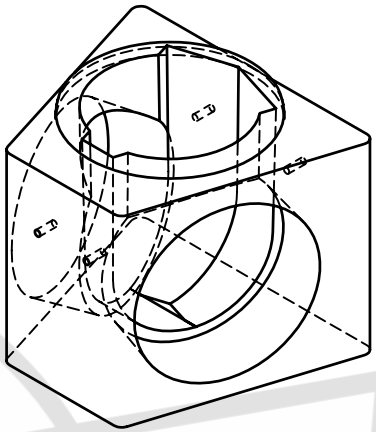

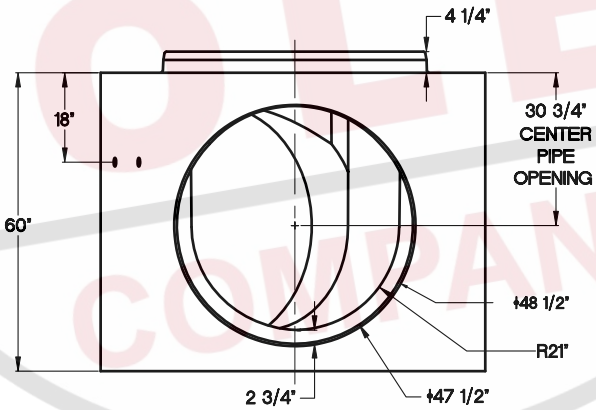

Structure manufactured to C 478 and/or C 913.

Reinforcing conforms to either ASTM A 185 for wire mesh or ASTM A 615 (Gr 60) for reinforcing bars.

4000 PSI minimum concrete.

Equipped with two S206-48 boot for use with 42" ductile iron pipe.

Transition top to 48" diameter for flat top or stack out.

Approximate weight: 5 tons

PRODUCTS FOLEY COMPANY

PRODUCTS FOLEY COMPANY
208 JEFFERSON STREET
NEWNAN, GEORGIA 30263
(770) 251-0296

42"-35° Ductile Iron Transition Base

SECTION	D. I. TRANSITION	DATE 11-01-01	REVISION
SCALE	NTS	DRAWN BY DRM	PAGE # 11-8

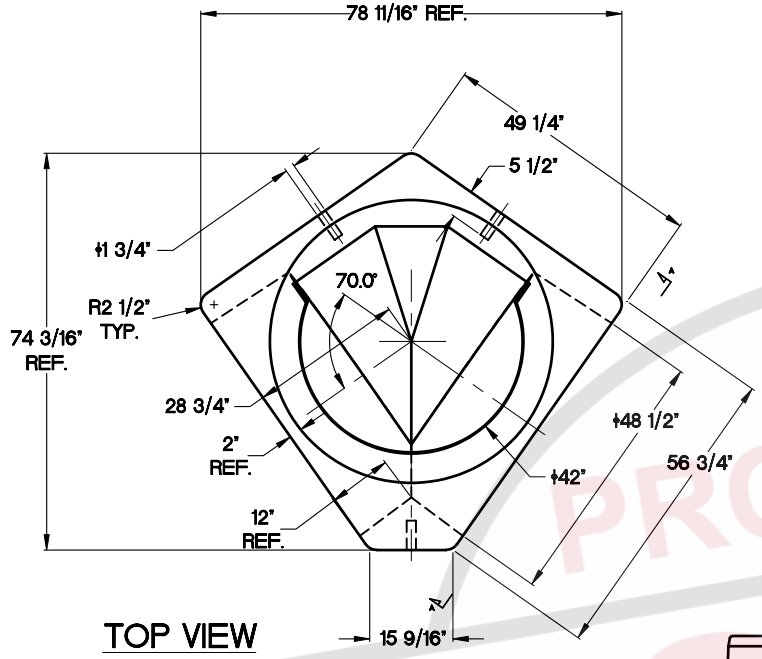

TOP VIEW

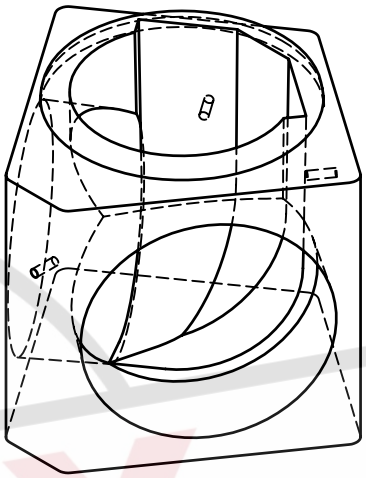

ISOMETRIC VIEW

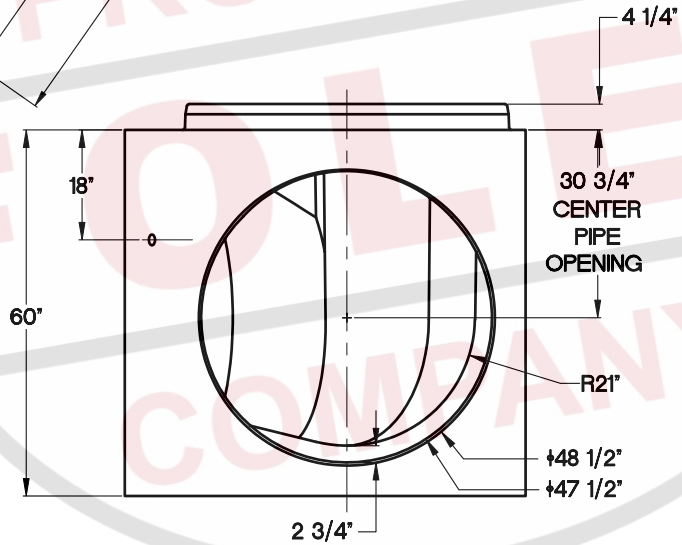

VIEW A-A

Structures manufactured to ASTM C 478 and/or C 913.

Reinforcing conforms to either ASTM A 185 for wire mesh or A 615 (Gr 60) for reinforcing bars.

4000 psi minimum concrete.

Equipped with two S206-48 boots for use with 42" ductile iron pipe.

Transition top to 48" diameter for flat top or stack out.

Approximate weight: 4.1 tons.

PRODUCTS FOLEY COMPANY

PRODUCTS FOLEY COMPANY
208 JEFFERSON STREET
NEWNAN, GEORGIA 30263
(770) 251-0296

42"-70° Ductile Iron Transition Base

SECTION	D. I. TRANSITION	DATE 11-01-01	REVISION
SCALE	NTS	DRAWN BY DRM	PAGE # 11-9

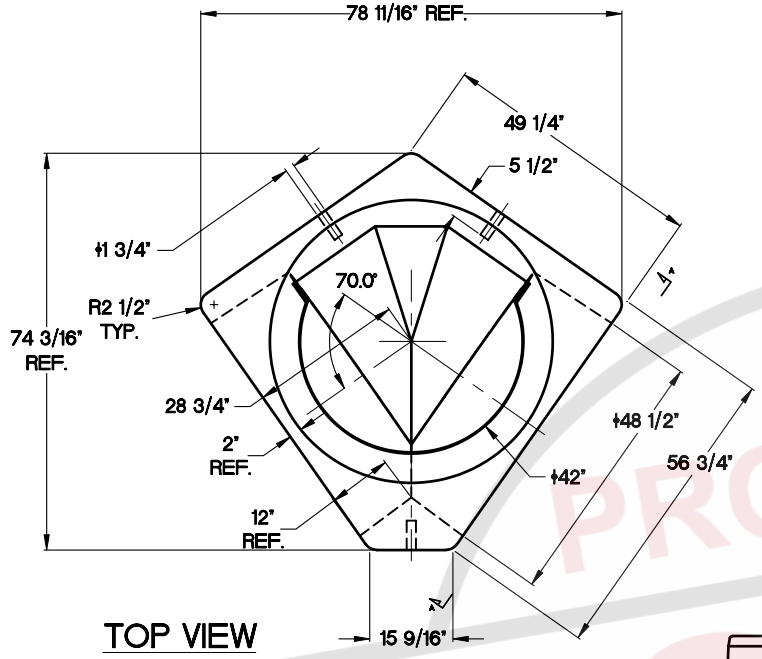

TOP VIEW

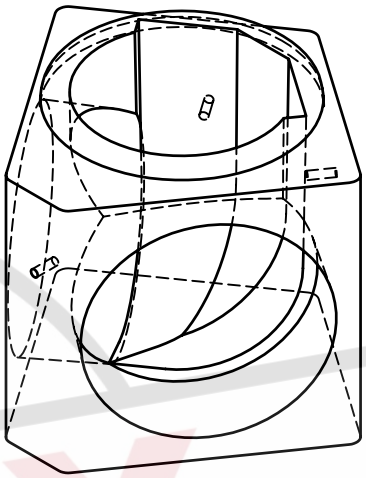

ISOMETRIC VIEW

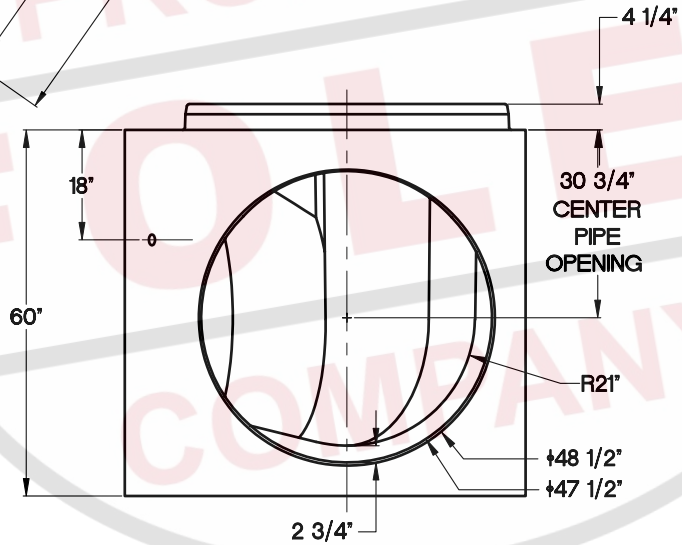

VIEW A-A

Structures manufactured to ASTM C 478 and/or C 913.

Reinforcing conforms to either ASTM A 185 for wire mesh or A 615 (Gr 60) for reinforcing bars.

4000 psi minimum concrete.

Equipped with two S206-48 boots for use with 42" ductile iron pipe.

Transition top to 48" diameter for flat top or stack out.

Approximate weight: 4.1 tons.

PRODUCTS FOLEY COMPANY

PRODUCTS FOLEY COMPANY
208 JEFFERSON STREET
NEWNAN, GEORGIA 30263
(770) 251-0296

42"-70° Ductile Iron Transition Base

SECTION	D. I. TRANSITION	DATE 11-01-01	REVISION
SCALE	NTS	DRAWN BY DRM	PAGE # 11-9

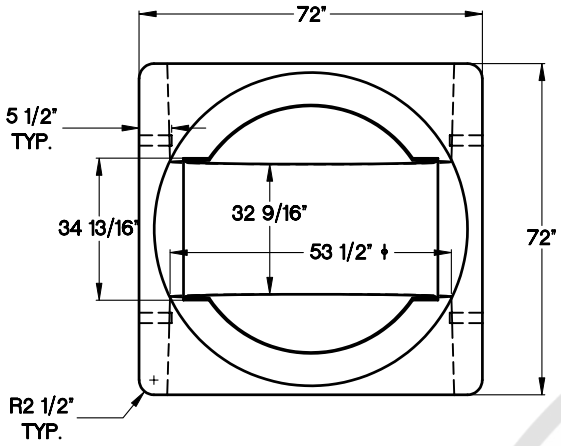

TOP VIEW

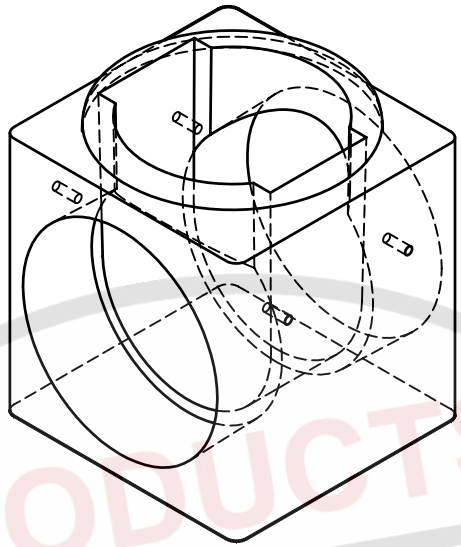

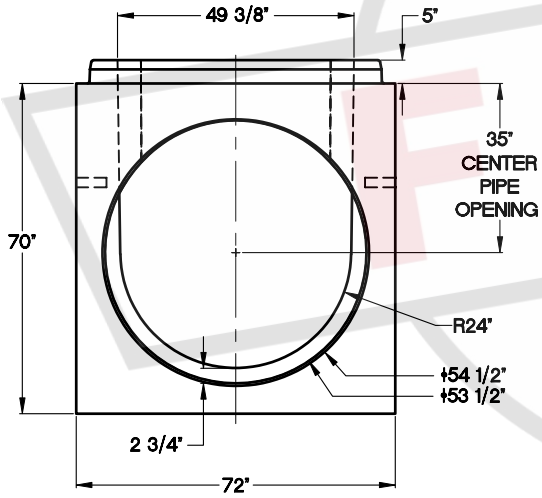

FRONT VIEW

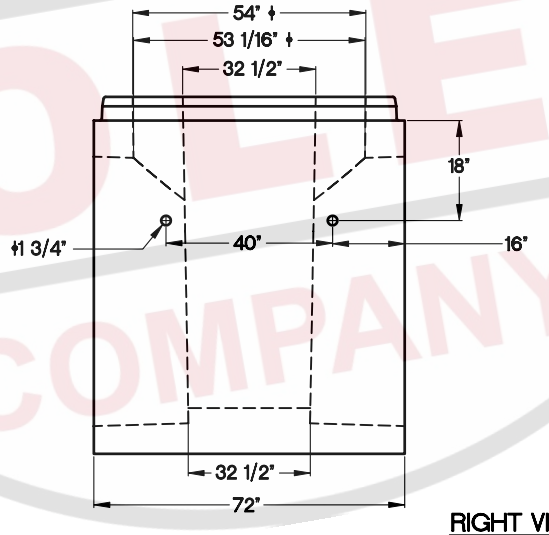

RIGHT VIEW

Structure manufactured to ASTM C 478 and/or C 913.

Reinforcing conforms to either ASTM A 185 for wire mesh or A 615 (Gr 60) for reinforcing bars.

4000 PSI concrete minimum.

Equipped with two S206-54L boots for use with 48" ductile iron pipe.

Transition top to 60" diameter for flat top or stack out.

Approximate weight: 8.1 tons.

PRODUCTS FOLEY COMPANY

PRODUCTS FOLEY COMPANY
208 JEFFERSON STREET
NEWNAN, GEORGIA 30263
(770) 251-0296

48"-0° Ductile Iron Transition Base

SECTION	D. I. TRANSITION	DATE 02-24-02	REVISION
SCALE	NTS	DRAWN BY EFD	PAGE # 11-10

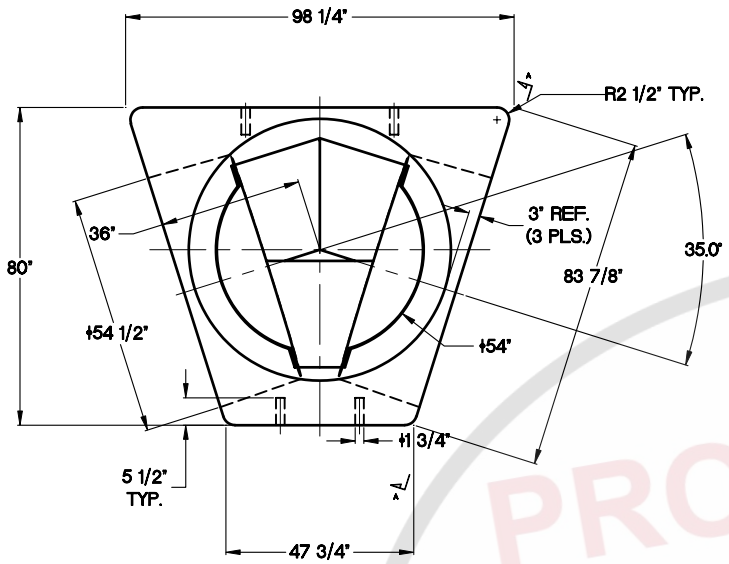

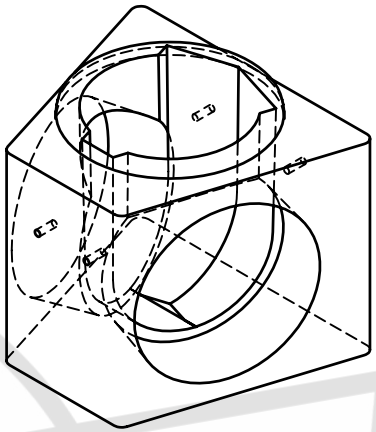

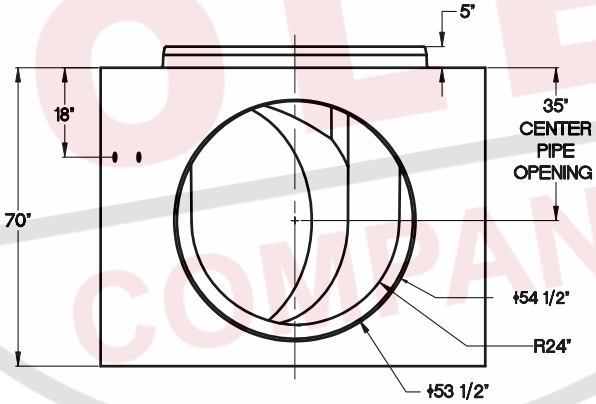

Structure manufactured to C 478 and/or C 913.

Reinforcing conforms to either ASTM A 185 for wire mesh or ASTM A 615 (Gr 60) for reinforcing bars.

4000 PSI minimum concrete.

Equipped with two S206-54L boot for use with 48" ductile iron pipe.

Transition top to 60" diameter for flat top or stack out.

Approximate weight: 10 tons

PRODUCTS FOLEY COMPANY

PRODUCTS FOLEY COMPANY
208 JEFFERSON STREET
NEWNAN, GEORGIA 30263
(770) 251-0296

48"-35° Ductile Iron Transition Base

SECTION	D. I. TRANSITION	DATE 02-24-02	REVISION
SCALE	NTS	DRAWN BY EFD	PAGE # 11-11

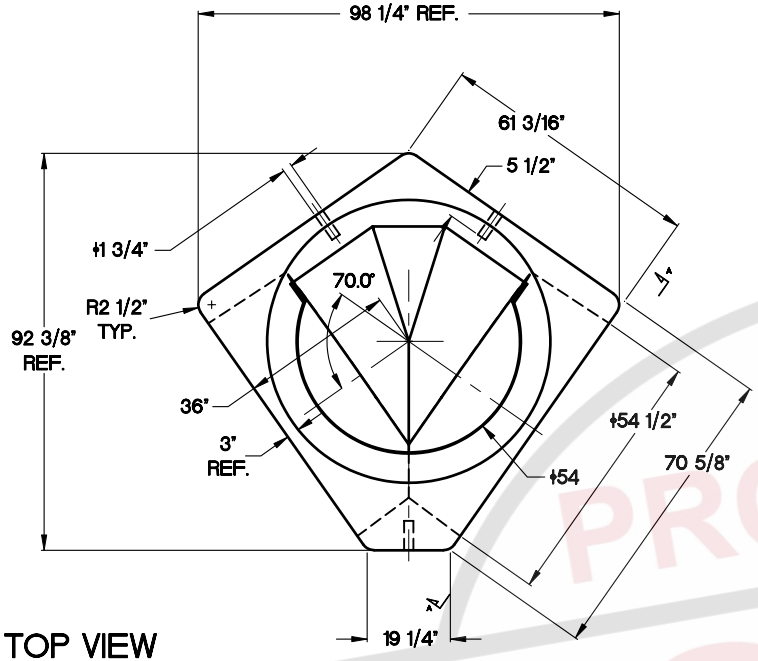

TOP VIEW

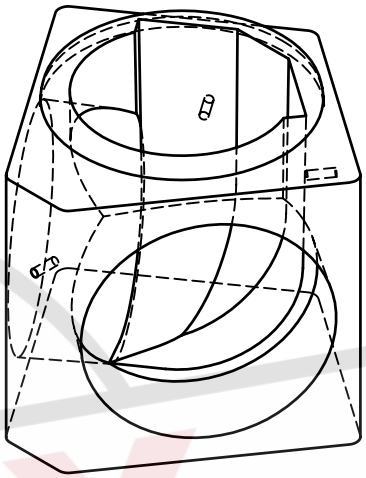

ISOMETRIC VIEW

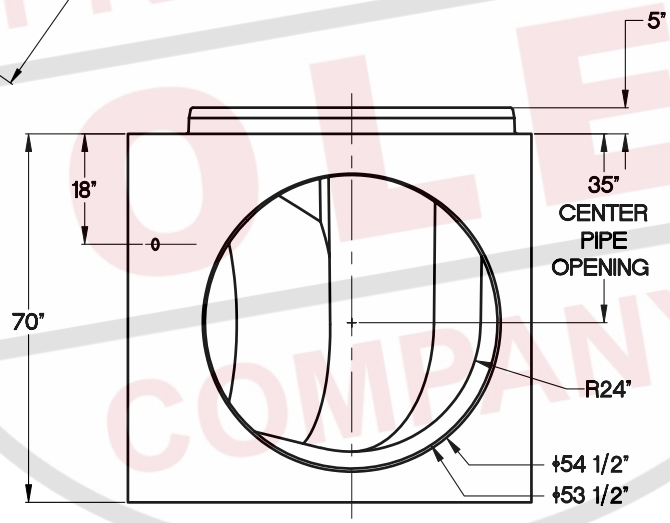

VIEW A-A

Structures manufactured to ASTM C 478 and/or C 913.

Reinforcing conforms to either ASTM A 185 for wire mesh or A 615 (Gr 60) for reinforcing bars.

4000 psi minimum concrete.

Equipped with two S206-54L boots for use with 48" ductile iron pipe.

Transition top to 60" diameter for flat top or stack out.

Approximate weight: 8.5 tons.

PRODUCTS FOLEY COMPANY

PRODUCTS FOLEY COMPANY
208 JEFFERSON STREET
NEWNAN, GEORGIA 30263
(770) 251-0296

48"-70° Ductile Iron Transition Base

SECTION	D. I. TRANSITION	DATE 02-21-02	REVISION
SCALE	NTS	DRAWN BY EFD	PAGE # 11-12

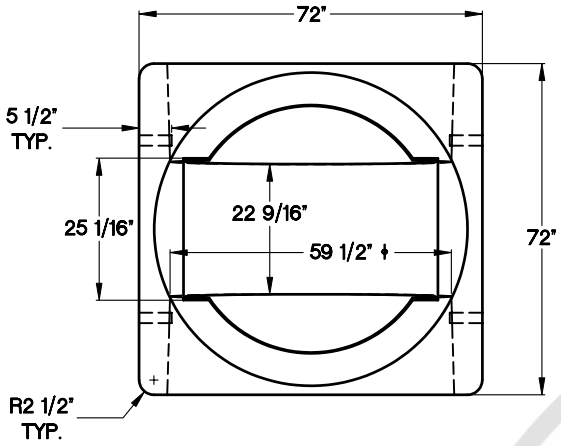

TOP VIEW

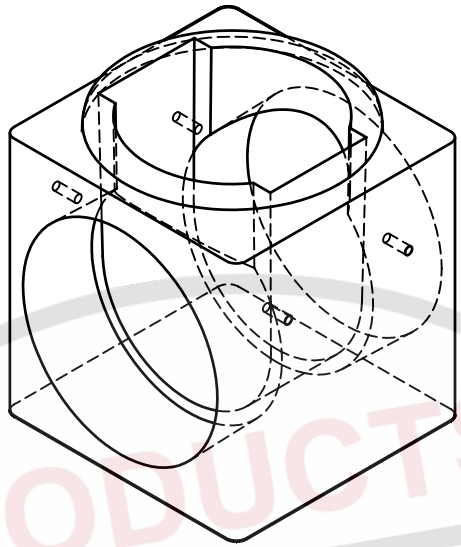

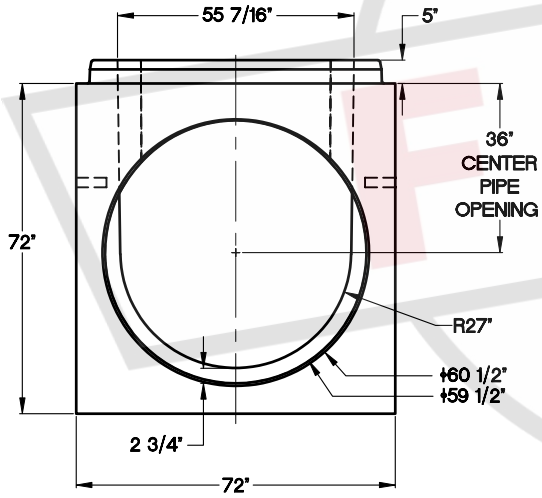

FRONT VIEW

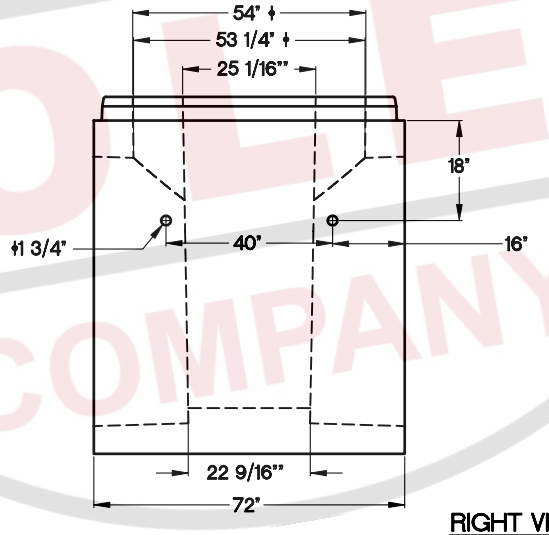

RIGHT VIEW

Structure manufactured to ASTM C 478 and/or C 913.

Reinforcing conforms to either ASTM A 185 for wire mesh or A 615 (Gr 60) for reinforcing bars.

4000 PSI concrete minimum.

Equipped with two S206-62 boots for use with 54" ductile iron pipe.

Transition top to 60" diameter for flat top or stack out.

Approximate weight: 6.9 tons.

PRODUCTS FOLEY COMPANY

208 JEFFERSON STREET
NEWNAN, GEORGIA 30263
(770) 251-0296

54"-0° Ductile Iron Transition Base

SECTION	D. I. TRANSITION	DATE 02-24-02	REVISION
SCALE	NTS	DRAWN BY EFD	PAGE # 11-13

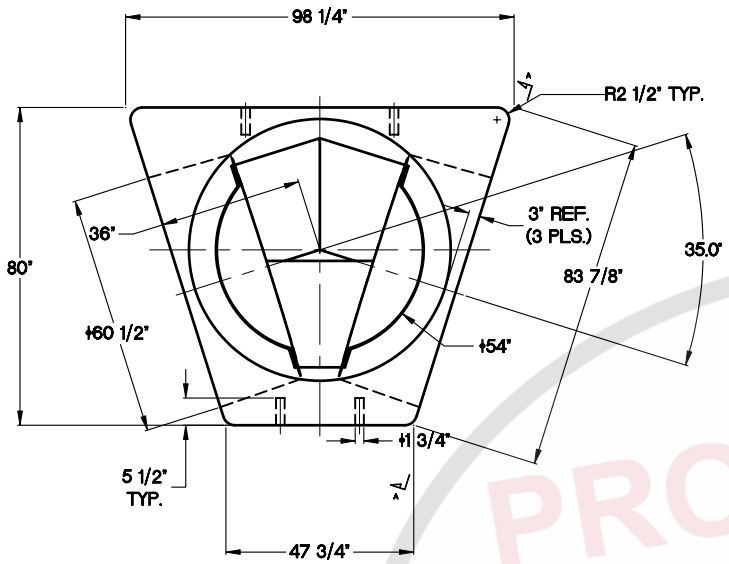

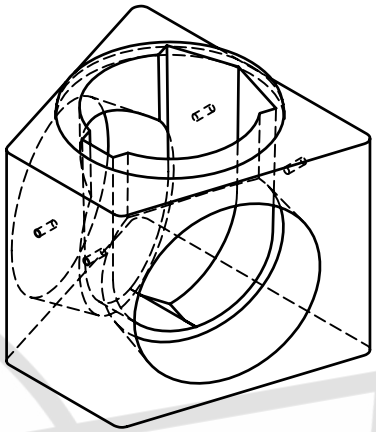

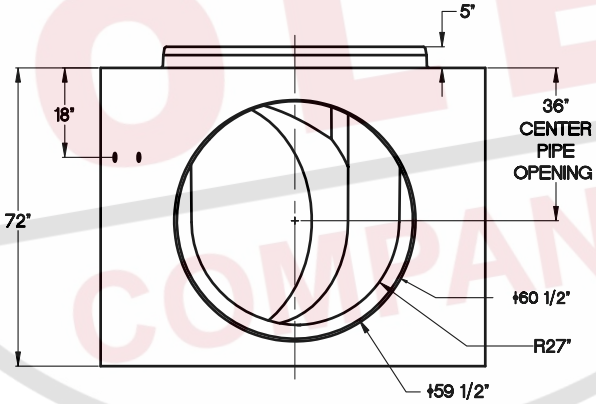

Structure manufactured to C 478 and/or C 913.

Reinforcing conforms to either ASTM A 185 for wire mesh or ASTM A 615 (Gr 60) for reinforcing bars.

4000 PSI minimum concrete.

Equipped with two S206-62 boot for use with 54" ductile iron pipe.

Transition top to 60" diameter for flat top or stack out.

Approximate weight: 9 tons

PRODUCTS FOLEY COMPANY

PRODUCTS FOLEY COMPANY
208 JEFFERSON STREET
NEWNAN, GEORGIA 30263
(770) 251-0296

54"-35° Ductile Iron Transition Base

SECTION	D. I. TRANSITION	DATE 02-24-02	REVISION
SCALE	NTS	DRAWN BY EFD	PAGE # 11-14

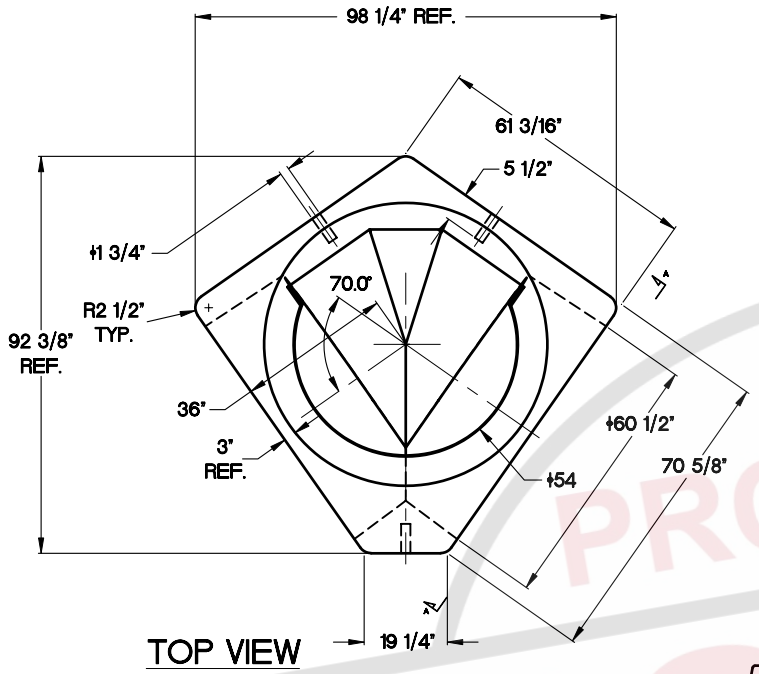

TOP VIEW

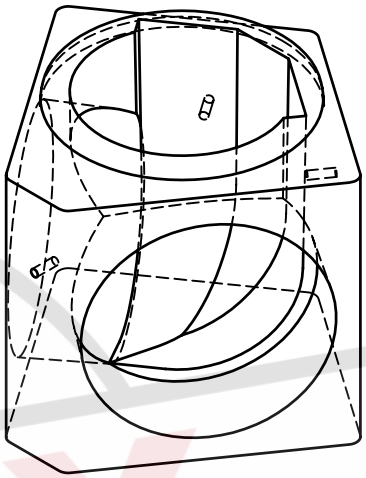

ISOMETRIC VIEW

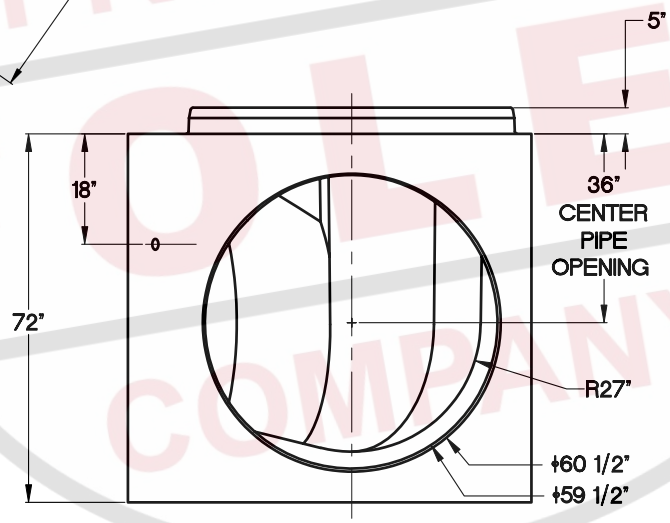

VIEW A-A

Structures manufactured to ASTM C 478 and/or C 913.

Reinforcing conforms to either ASTM A 185 for wire mesh or A 615 (Gr 60) for reinforcing bars.

4000 PSI minimum concrete.

Equipped with two S206-62 boots for use with 54" ductile iron pipe.

Transition top to 60" diameter for flat top or stack out.

Approximate weight: 7.2 tons.

PRODUCTS FOLEY COMPANY

PRODUCTS FOLEY COMPANY
208 JEFFERSON STREET
NEWNAN, GEORGIA 30263
(770) 251-0296

54"-70° Ductile Iron Transition Base

SECTION	D. I. TRANSITION	DATE 02-21-02	REVISION
SCALE	NTS	DRAWN BY EFD	PAGE # 11-15